ALTUS

cliQ plus Spec Guide

November 2016

Technology Workstation Solutions — Powered

...always accessible power.

clio plus

Swappable Power and On-Board Charging

Clio plus is a flexible ***hybrid system*** that can utilize either swappable-power through swappable batteries or on-board charging through wall outlet power.

Flexibility of Workflow

Clio plus offers complete flexibility in swappable power and performance. Depending on user preference, the caregiver can utilize either on-board charging; where the charger powers both the technology components and recharges the battery simultaneously (10 Amp charging rate = 2.5 hours recharge time).

Or, the caregiver can utilize swappable power, where a depleted battery can be easily exchanged for a fully charged (25 Amp/Hr.) battery.

Double your Run-time

Enhance your workflow by "doubling your run-time". Simply specify a second battery to be added to your Clio Plus Cart at all times. The batteries are used sequentially which would double your run-time.

Hybrid Performance

Clio plus lightweight renewable LiFePO4 (Lithium Iron Phosphate) battery technology is the most durable, reliable and safest battery technology available.

ALTUS

Introducing an intelligent approach to 24/7 power.

CLIO PLUS is always having the ability to power up technology components. This is achieved through swappable charging (cordless) or on-board charging. Altus' AC Powered System keeps your mobile workstations and your workflow flexible and uninterrupted.

Benefits of Clio Plus

+ Always have power for a complete or extended shift.
+ Increase time with patients and workflow productivity without having to search for a cart with full power before or during a shift.
+ Decrease cost of replacing batteries. Clio Plus battery is good for 5 years and 3000+ cycles.
+ Decreases capital and operating expenses by reducing replacement batteries, repair time and down time.
+ Hot swap a battery when low on power - only one battery is needed per shift.
+ Double your run-time with a two-battery system. When you specify a second battery, you can minimize your swapping time and maximize your workflow.
+ Charge battery in approximately 2.5 hours.
+ See how much power is left before you run out of power.

clio plus

AC Power System - Lithium Iron Phosphate (LiFePO4) offers exceptional performance and a favorable return on investment. Continued workstation monitoring provides: visibility of charge level, charge time, battery status and battery health.

Constant, Ready Power.

The Clio Plus AC Powered System gives the user 175 Watts of constant, "Ready Power".

Instant Use.

Increase time with patients and workflow productivity without having to search for a cart with full power before or during a shift.

When a previous user has left the battery in a low charge condition, a new user can immediately exchange the battery and continue on with their rounds.

Smart charging.

The Clio Plus AC Powered System automatically performs tasks that greatly ease the burden on the cart user by automatically:

- Supporting hot-swap function without interruption of power
- Monitoring battery health and safety
- Choosing the more suitable battery to be on-line at all times
- Intelligently managing on-cart charging to maximize energy flow to the batteries
- Directing electrical energy to the cart from a battery or from a wall outlet when the cart is plugged in and batteries are charging
- Providing constant state of charge status to a light array and to the cart's computer
- Alerting the user when there is only one hour of battery life remaining
- 175 Watt Output Capacity
- AC-In Hospital Grade Coiled Power Plug (7' 5") - Optional
- 3 AC-Out (NEMA 5-15) Outlets
- Integrated Cable Management

Battery Chemistry Specifications

- 320Wh, 12.8V LiFePO4 (Lithium Iron Phosphate) battery
- Size: 6.5"W x 3"D x 10"H (includes handle)
- Weight: 8.1 lbs. (3.7 kg)
- 3,000 Cycle Life
- Charge time: 2 hours for complete charge (from fully depleted)
- Run-time: 8 hours (Assume constant 40W output)
- Maximum Discharge Rate: 10A Charger
- Capacity: Nominal minimum 25Ah
- Swap Process: Ensure a charged battery is in opposing bay to avoid power loss.
- Electrically Safe: Battery certified to UL 2054, IEC 62133

Power System/Controller Specifications

- System Capacity: 175 Watts
- Size: 14.06 x 8.5 x 3.5in
- Weight: 10.5 lbs
- Output Power Voltage: 120 VAC
- Maximum Discharge Rate: 10A Charger
- System level certification to UL 60601-1

Clio Plus Battery Fuel Gauge

Easily see how much power is left on the cart before it runs out of power.

The Battery Fuel Gauge displays both state of discharge and recharging status. It is mounted where it is visible to the user. A last Hour Alert on the user-facing display lights up when the cart has about one more hour of use.

The battery fuel gauge displays the state of charge for a one or two battery configuration. The display shows time remaining in 20% increments. One amber LED and 4 green LEDs represent that battery is fully charged, 100%. One flashing amber LED indicates that less than 10% of the battery's capacity remains.

Visual indicators help monitor the battery's charge state. Not only does the battery fuel gauge keep you aware of the battery conditions but the battery pack itself displays the charge status. These indicators give the user confidence that the cart will be powered for a known period of time.

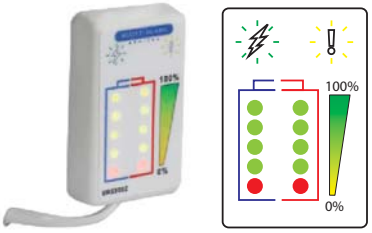

Battery Fuel Gauge

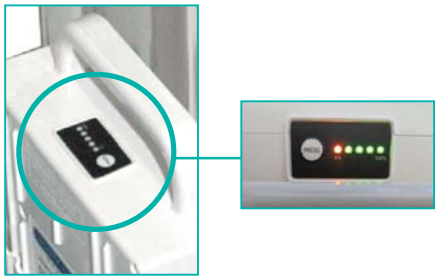

Battery Power Indicator

Clio Plus Battery Charging Unit

The Clio Plus two-battery charger is for charging two batteries simultaneously.

With its simple and quick-connect attachment, batteries are swapped and charged easily.

Making a Difference

Accessing technology at anytime and anywhere, working safely within healthcare environments, and enhancing productivity are just some of the ways that we are making a difference in mobile computing. Below are other ways Altus is differentiating itself in today's healthcare market.

1. **Innovative & Streamlined Design:**
   Form follows function with the simple, classic aesthetics. The streamlined design promotes a healing environment and a calming healthcare setting.

2. **Ease of Mobility:**
   Giving you a **lightweight** and highly mobile solution **(4" shrouded single-wheel or dual-wheel casters)** helps assist you with delivering technology where you need it.

3. **True Sit to Stand adjustment capability:**
   Ascend™ lift technology offers 18" of effortless and instant height adjustment range with an easy to use height adjustment hand lever.

4. **Small Footprint:**
   With just an 18.5" wide footprint, Clio fits into tight spaces and has ample foot clearance

5. **Large work surface:**
   A generous (21"W x 20"D) open and clear work surface allows for an easy-to-manage workflow.

6. **Color Choices:**
   Three solid, four wood grain and two abstract 3D Laminate worksurface colors equals multiple choices for you.

7. **Keyboard with Mousing:**
   Smooth pull-out adjustment and intuitive 0 /-20˚ keyboard tilt, increases comfort and productivity.

   With the safety-release feature, the keyboard platform rotates 90˚ if too much weight is accidentally added. Just pop the keyboard back into position eliminating downtime with potential brake/fix issues.

8. **Cable Management:**
   Our internal technology storage area manages all of your cables and technology components into one easy to reach area.

9. **LiFePO4 (Lithium Iron Phosphate) Battery:**
   Don't let the lightweight design fool you. Our LiFe Battery packs a punch with its impressive recharge time of 2 hours and cycle life.

10. **Handle:**
    Our sleek handle ensures effortless navigation.

11. **Technology Accessibility:**
    Our new technology tray gives IT professionals a hands-free technology integration experience. With enough storage room for excess cables, small form factors, thin clients or up to 17" laptops.

12. **Ships fully assembled:**
    Making deployment faster and easier.

Enhance your Workflow with these Swappable Power Options...

Each healthcare professional has a different workflow. That is why Clio Plus has six different swappable power options:

1 - Workflow Oprion #1: **C9** - Swap your battery and no on-board charging (outlet power).
2 - Workflow choice #2: **C9C** - Swap your battery and ultilze on-board charging (outlet power).
3 - Workflow choice #3: **C10** - Swap your battery and no on-board charging (outlet power).
4 - Workflow choice #4: **C10C** - Swap your battery and utilize on-board charging (outlet power).
5 - Workflow choice #5: **C11** - Swap your battery and no on-board charging (outlet power).
6 - Workflow choice #4: **C11C** - Swap your battery and utilize on-board charging (outlet power).

Double your Run-time

Enhance your workflow by “doubling your run-time”. Simply specify a second battery to be added to your Clio Plus Cart at all times. The batteries are used sequentially, which would double your run-time.

Clio Plus Key Features

Innovative features provide workflow efficiency and healthy working...

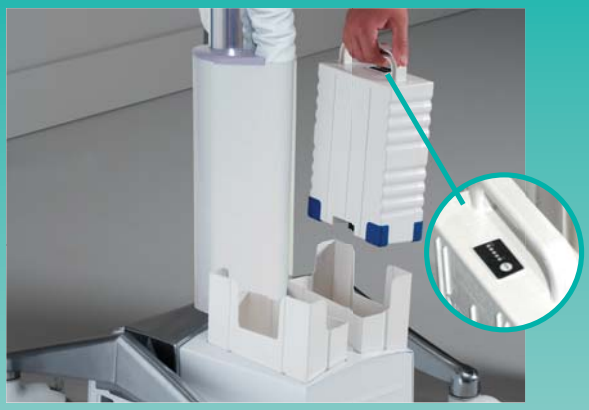

Renewable Power at your Fingertips:

The lightweight (8 lb.), ergonomically designed battery makes it easy for caregivers to install and remove the battery using a one-hand operation.

25 Ah LiFePO4 (Lithium Iron Phosphate) Battery

13.2 V, 175W Power System (Battery Interface)

Battery LED Indicator Shows State of Charge (Shown Left)

Battery Dimensions: 6.5"W x 10"H x 3"D

Height Adjustable LCD Monitor Support (FSA-5): Equipped on Models C9 and C9C

Internal Cable Management
Dimensions: 14.75" H x 3.75" W x 5"D
5.5" of Height Adjustment: 9.25" - 14.75"
+20˚/-10˚ of Tilt
+/- 180˚ of Front/Back Rotation
75mm/100mm VESA Standard Positions
13 lb. Maximum Weight Limit

All-in-One PC Monitor Support (FSA-9): Equipped on Models C10 and C10C

Internal Cable Management
Dimensions: 10.75" H x 3.75" W x 5"D
+20˚/-10˚ of Tilt
+/- 180˚ of Front/Back Rotation
75mm/100mm VESA Standard Positions
20 lb. Maximum Weight Limit

Battery Fuel Gauge:

The battery fuel gauge shows time remaining in 20% increments for a one or two-battery configuration. One amber LED and 4 green LEDs represent that battery is fully charged, 100%. One flashing amber LED indicates that less than 10% of the battery's capacity remains.

Velcro Attachment.

Small Footprint:

With just an 18.5" wide footprint, Clio Plus fits into tight spaces and has ample foot clearance.

Large Worksurface Area:

The large 20"W x 21"D worksurface provides caregivers with ample space for multiple tasks.

Choose a casters that fits your application...

Perfect choice when seeking maximum mobility:

Single-Wheel Shrouded Casters:
4”/100mm Highly Mobile
2 Locking/2 Non-Locking

Perfect choice when going floor-to-floor and traversing elevator thresholds:

Dual-Wheel Caster:
4”/100mm Mobile Caster
2 Locking/2 Non-Locking

Pull-out Keyboard Platform:
Dimensions: 23”W x 8.75” D
0˚/-20˚ of Tilt
One-Piece Design
Contoured Wrist Rest
Extends 4”
Safety-release Hinge

Mousing Surface:
Dimensions: 8”W x 6.5” D
Cable-stay feature in right and left corners of keyboard platform.
Works with all optical mice.

Handle with LED Light:
A LED Light from the handle illuminates the keyboard platform in dimly lit areas. There is a 5 minute timeout feature If a user forgets to turn the light off.
Promotes easy manueverability
Polished finish

Technology Storage Area:
Large storage area easily stores thin clients and access cables.
Technology Area Dimensions:
Upper Deck:
18.25”W x 15”D x 1.5”H
Lower Deck:
10.5”W x 15”D x 2.25”H

Height Adjustable Hand Lever
Hand Lever has ergonomically correct positioning
Depress to adjust height
White Finish

Integrated Cordless Bar Code Holder:
Dimensions:
6.25”W x 3.25”D x 1.5” H
Ionic white Finish

Clio Plus LCD Cart C9

Model Number	Worksurface Dimensions	Base Dimensions	Weight
C9-YYYY-Z	**20”D x 21”W**	**18.5”W x 21.5”D**	**96 lbs.**

Z = Single Wheel Shrouded Casters (C9-YYYY-1), Dual Wheel Casters (C9-YYYY-2), YYYY = Worksurface color; see pg. 20.

Key Adjustability Features:

Cart Height Adjustment:
33 1/2” - 51 1/2”

Keyboard Platform Height Adjustment:
28” - 46”

Monitor Supprt Height Adjustment:
9 1/4” - 14 3/4”
(5.5” of Height Adjustment)

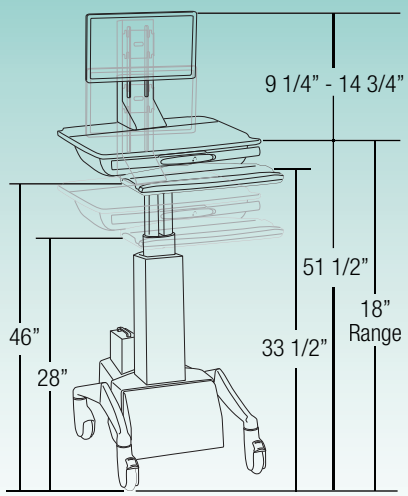

Choose the right casters for you application:

OR

(Base) **CHOICE 1: C9-YYYY-1** (Perfect Choice for Maximum Mobility)
- Ascend Height Adjustable Base
- Integrated Cable Management
- 25 Ah LiFePo4 Battery System
- **4”/100mm Shrouded Casters**
- 2 Locking / 2 Non-Locking
- One Battery Included on Cart

(Base) **CHOICE 2: C9-YYYY-2** (Perfect Choice for floor-to floor and traversing elevator thresholds)
- Ascend Height Adjustable Base
- Integrated Cable Management
- 25 Ah LiFePo4 Battery System
- **4”/100mm Dual Wheel Casters**
- 2 Locking / 2 Non-Locking
- One Battery Included on Cart

Worksurface
- 5/8” 3D Laminate
- Friction/Stay-Open Hinges
- Keyed Lock (HIPAA Compliant)
- Handle (HN)
- Integrated Cordless Bar Code Holder

Included Accessories

- **Height Adjustable LCD Monitor Support - FSA-5**
  - Vesa Standard 75mm/100mm with Quick Mount Plate
  - Tilt Range: -20˚/+10˚
  - +/- 180 Degrees Front/Back Rotation
  - 5.5” Height Adjustment
  - Integrated Cable Management
  - **Maximum 13 lbs. Weight Limit**

- **Keyboard Platform and Mousing - KBP**
  - One-Piece Design
  - Left/Right Cable Management
  - Mousing Area 6”H x 8”W
  - 1/2” walls of keyboard platform prevent keyboard and mouse from falling off
  - Intuitive 0 /-20 degrees Tilting
  - Keyboard Platform Extends 4”
  - Contoured Wristrest

Clio Plus LCD Cart
C9C

Model Number	Worksurface Dimensions	Base Dimensions	Weight
C9C-YYYY-Z	**20”D x 21”W**	**18.5”W x 21.5”D**	**96 lbs.**

Z = Single Wheel Shrouded Casters (C9C-YYYY-1), Dual Wheel Casters (C9C-YYYY-2), YYYY = Worksurface color; see pg. 20.

Key Adjustability Features:

Cart Height Adjustment:
33 1/2” - 51 1/2”

Keyboard Platform Height Adjustment:
28” - 46”

Monitor Support Height Adjustment:
9 1/4” - 14 3/4”
(5.5” of Height Adjustment)

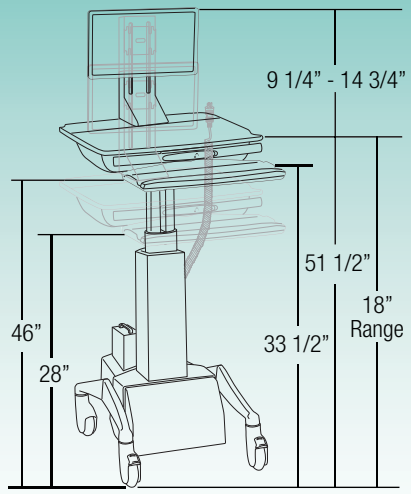

Choose the right casters for you application:

(Base) **CHOICE 1: C9C-YYYY-1** (Perfect Choice for Maximum Mobility)
- Ascend Height Adjustable Base
- Integrated Cable Management
- 25 Ah LiFePo4 Battery System
- **4”/100mm Shrouded Casters**
- 2 Locking / 2 Non-Locking
- One Battery Included on Cart

OR

(Base) **CHOICE 2: C9C-YYYY-2** (Perfect Choice for floor-to floor and traversing elevator thresholds)
- Ascend Height Adjustable Base
- Integrated Cable Management
- 25 Ah LiFePo4 Battery System
- **4”/100mm Dual Wheel Casters**
- 2 Locking / 2 Non-Locking
- One Battery Included on Cart

Worksurface
- 5/8” 3D Laminate
- Friction/Stay-Open Hinges
- Keyed Lock (HIPAA Compliant)
- Coiled Power Cord with Hook
- Handle (HN)
- Integrated Cordless Bar Code Holder

Included Accessories

- **Height Adjustable LCD Monitor Support - FSA-5**
  - Vesa Standard 75mm/100mm with Quick Mount Plate
  - Tilt Range: -20˚/+10˚
  - +/- 180 Degrees Front/Back Rotation
  - 5.5” Height Adjustment
  - Integrated Cable Management
  - **Maximum 13 lbs. Weight Limit**

- **Keyboard Platform and Mousing - KBP**
  - One-Piece Design
  - Left/Right Cable Management
  - Mousing Area 6”H x 8”W
  - 1/2” walls of keyboard platform prevent keyboard and mouse from falling off
  - Intuitive 0 /-20 degrees Tilting
  - Keyboard Platform Extends 4”
  - Contoured Wristrest

ANSI/BIFMA & CARB 93120 Compliant

Clio Plus All-in-One PC Cart
C10

Model Number	Worksurface Dimensions	Base Dimensions	Weight
C10-YYYY-Z	**20”D x 21”W**	**18.5”W x 21.5”D**	**96 lbs.**

Z = Single Wheel Shrouded Casters (C10-YYYY-1), Dual Wheel Casters (C10-YYYY-2), YYYY = Worksurface color; see pg. 20.

Key Adjustability Features:

Cart Height Adjustment:
33 1/2” - 51 1/2”

Keyboard Platform Height Adjustment:
28” - 46”

Monitor Support Height Adjustment:
Fixed Height
10 3/4” H (Measured from middle of VESA plate to base of monitor support)

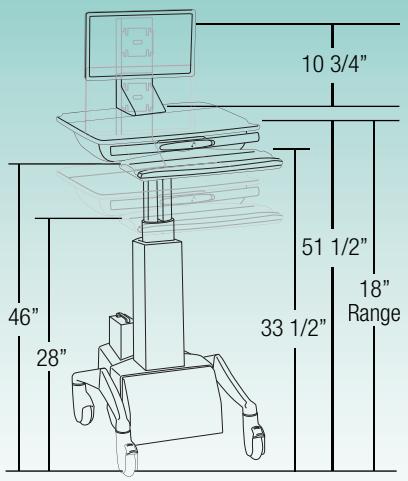

Choose the right casters for you application:

(Base) **CHOICE 1: C10-YYYY-1** (Perfect Choice for Maximum Mobility)
- Ascend Height Adjustable Base
- Integrated Cable Management
- 25 Ah LiFePo4 Battery System
- **4”/100mm Shrouded Casters**
- 2 Locking / 2 Non-Locking
- One Battery Included on Cart

OR

(Base) **CHOICE 2: C10-YYYY-2** (Perfect Choice for floor-to floor and traversing elevator thresholds)
- Ascend Height Adjustable Base
- Integrated Cable Management
- 25 Ah LiFePo4 Battery System
- **4”/100mm Dual Wheel Casters**
- 2 Locking / 2 Non-Locking
- One Battery Included On Cart

Worksurface
- 5/8” 3D Laminate
- Friction/Stay-Open Hinges
- Keyed Lock (HIPAA Compliant)
- Handle (HN)
- Integrated Cordless Bar Code Holder

Included Accessories

- **All-in-One PC Monitor Support - FSA-9**
  - Vesa Standard 75mm/100mm with Quick Mount Plate
  - Dimensions: 9”H x 3.6”W x 4.6”D
  - Tilt Range: -90˚/+6˚
  - +/- 180 Degrees Front/Back Rotation
  - **Fixed Height**
  - Integrated Cable Management
  - **Maximum 20 lb. Weight Limit**

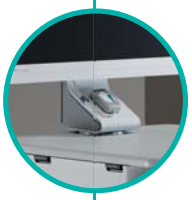

- **Keyboard Platform and Mousing - KBP**
  - One-Piece Design
  - Left/Right Cable Management
  - Mousing Area 6”H x 8”W
  - 1/2” walls of keyboard platform prevent keyboard and mouse from falling off
  - Intuitive 0 /-20 degrees Tilting
  - Keyboard Platform Extends 4”
  - Contoured Wristrest

Clio Plus All-in-One PC Cart
C10C

Model Number	Worksurface Dimensions	Base Dimensions	Weight
C10C-YYYY-Z	**20"D x 21"W**	**18.5"W x 21.5"D**	**96 lbs.**

Z = Single Wheel Shrouded Casters (C10C-YYYY-1), Dual Wheel Casters (C10C-YYYY-2), YYYY = Worksurface color; see pg. 20.

Key Adjustability Features:

Cart Height Adjustment:
33 1/2" - 51 1/2"

Keyboard Platform Height Adjustment:
28" - 46"

Monitor Support Height Adjustment:
Fixed Height
10 3/4" H (Measured from middle of VESA plate to base of monitor support)

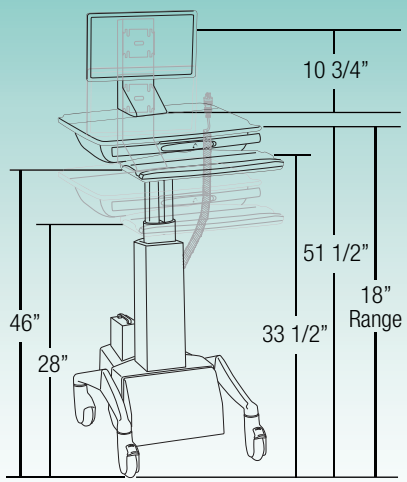

Choose the right casters for you application:

OR

(Base) **CHOICE 1: C10C-YYYY-1** (Perfect Choice for Maximum Mobility)
- Ascend Height Adjustable Base
- Integrated Cable Management
- 25 Ah LiFePo4 Battery System
- **4"/100mm Shrouded Casters**
- 2 Locking / 2 Non-Locking
- One Battery Included on Cart

(Base) **CHOICE 2: C10C-YYYY-2** (Perfect Choice for floor-to floor and traversing elevator thresholds)
- Ascend Height Adjustable Base
- Integrated Cable Management
- 25 Ah LiFePo4 Battery System
- **4"/100mm Dual Wheel Casters**
- 2 Locking / 2 Non-Locking
- One Battery Included on Cart

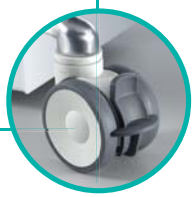

Worksurface
- 5/8" 3D Laminate
- Friction/Stay-Open Hinges
- Keyed Lock (HIPAA Compliant)
- Coiled Power Cord with Hook
- Handle (HN)
- Integrated Cordless Bar Code Holder

Included Accessories

• **All-in-One PC Monitor Support - FSA-9**
- Vesa Standard 75mm/100mm with Quick Mount Plate
- Dimensions: 9"H x 3.6"W x 4.6"D
- Tilt Range: -90˚/+6˚
- +/- 180 Degrees Front/Back Rotation
- **Fixed Height**
- Integrated Cable Management
- **Maximum 20 lb. Weight Limit**

• **Keyboard Platform and Mousing - KBP**
- One-Piece Design
- Left/Right Cable Management
- Mousing Area 6"H x 8"W
- 1/2" walls of keyboard platform prevent keyboard and mouse from falling off
- Intuitive 0 /-20 degrees Tilting
- Keyboard Platform Extends 4"
- Contoured Wristrest

Clio Plus LCD Cart C11

Model Number	Worksurface Dimensions	Base Dimensions	Weight
C111-YYYY-Z	**20”D x 20”W**	**18.5”W x 21.5”D**	**96 lbs.**

Z = Single Wheel Shrouded Casters (C10C-YYYY-1), Dual Wheel Casters (C10C-YYYY-2), YYYY = Worksurface color; see pg. 20.

Key Adjustability Features:

Cart Height Adjustment:
33 1/2” - 51 1/2”

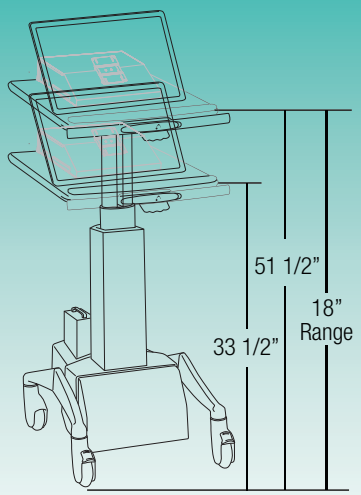

Choose the right casters for you application:

OR

(Base) **CHOICE 1: C11-YYYY-1** (Perfect Choice for Maximum Mobility)

Ascend Height Adjustable Base
Integrated Cable Management
25 Ah LiFePo4 Battery System
4”/100mm Shrouded Casters
2 Locking / 2 Non-Locking
One Battery Included on Cart

(Base) **CHOICE 2: C11-YYYY-2** (Perfect Choice for floor-to floor and traversing elevator thresholds)

Ascend Height Adjustable Base
Integrated Cable Management
25 Ah LiFePo4 Battery System
4”/100mm Dual Wheel Casters
2 Locking / 2 Non-Locking
One Battery Included on Cart

- Worksurface

20”W x 20”D - 1” Thick Worksurface
3D Laminate
Integrated Black Vinyl Wristrest
Handle (HN)

Included Accessories

- **LCD Monitor Support Housing**

Vesa Standard 75mm/100mm
with Quick Mount Plate
Tilt Range: 30˚ (+35˚/+65˚)
Keyed Lock (HIPAA Compliant)
Integrated Cable Management
Internal Technology Component
Storage Area Dimensions:
11.25”W x 8”D x 1.5”-5.25”H
Maximum 13 lb. Weight Limit

- **Swing-A-Mouse (SAM-3)**

8”W x 9”D

Clio Plus LCD Cart C11C

Model Number	Worksurface Dimensions	Base Dimensions	Weight
C11C-YYYY-Z	**20”D x 20”W**	**18.5”W x 21.5”D**	**96 lbs.**

Z = Single Wheel Shrouded Casters (C11C-YYYY-1), Dual Wheel Casters (C11C-YYYY-2), YYYY = Worksurface color; see pg. 20.

Key Adjustability Features:

Cart Height Adjustment:
33 1/2” - 51 1/2”

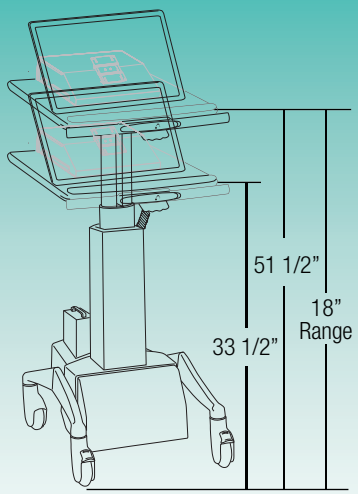

Choose the right casters for you application:

(Base) **CHOICE 1: C11C-YYYY-1** (Perfect Choice for Maximum Mobility)
- Ascend Height Adjustable Base
- Integrated Cable Management
- 25 Ah LiFePo4 Battery System
- **4”/100mm Shrouded Casters**
- 2 Locking / 2 Non-Locking
- One Battery Included on Cart

OR

(Base) **CHOICE 2: C11C-YYYY-2** (Perfect Choice for floor-to floor and traversing elevator thresholds)
- Ascend Height Adjustable Base
- Integrated Cable Management
- 25 Ah LiFePo4 Battery System
- **4”/100mm Dual Wheel Casters**
- 2 Locking / 2 Non-Locking
- One Battery Included on Cart

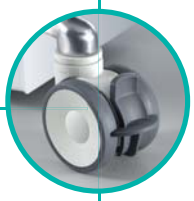

- Worksurface
  - 20”W x 20”D - 1” Thick Worksurface
  - 3D Laminate
  - Integrated Black Vinyl Wristrest
  - Handle (HN)

Included Accessories
- **LCD Monitor Support Housing**
  - Vesa Standard 75mm/100mm with Quick Mount Plate
  - Tilt Range: 30˚ (+35˚/+65˚)
  - Keyed Lock (HIPAA Compliant)
  - Integrated Cable Management
  - Internal Technology Component
  - Storage Area Dimensions:
  - 11.25”W x 8”D x 1.5”-5.25”H
  - **Maximum 13 lb. Weight Limit**

- **Swing-A-Mouse (SAM-3)**
  - 8”W x 9”D

ALTUS

Optional accessories specifically for your Workflow.

Accessories that can be configured to ensure an efficient workflow and improve productivity. Altus' **Productivity Tools** do just that.

Specified accessories and mounting locations allow for multiple configurations.

Select from the following configurations now to see how productive you can be tomorrow.

clio & clio plus

Single Accessory Use

PT-HB-PL
Column Mounted Basket
12.28"W x 5"D x 4"H

PT-MPS-6-PL
Column Mounted Adjustable Shelf
(Adjusts from 7"-12")

PT-SW1
Column Mounted Sani-Wipe Bracket
(Works with PDI Sani-Bracket)

PT-M2D-PL
Column Mounted 2-Drawer Cabinet
(2 Keyless Programmable Locks)

Multi-Accessory Use

(2) PT-HB-PL
Column Mounted Baskets

(1) PT-HB-PL & (1) PT-MPS-6-PL
Column Mounted Basket and Adjustable Shelf

(2) PT-MPS-6-PL
Column Mounted Adjustable Shelves

Batteries

P-CP-BA25
25 Amp LiFe Battery
Weight: 8 lbs.

320 Wh, 25 Amp, 12 V LiFe Battery
LED Indicator,

Chargers

P-CP-CH2
Two Bay Wall-Mount Charger
Weight: 20 lbs.

10 AH Charger, 2.5 Hours for
Complete Charge
Batteries not Included

storage systems

PT-HB-PL
Utility Basket
Weight: 3 lbs.

Holds Bar Code Charging Bases,
Zebra printers, etc.
12.28" W x 5"D x 4"H
Column Mount
Platinum (PL) Finish

PT-M2D-PL
2-Drawer Cabinet
Weight: 28 lbs.

2 Locking Drawers w/ Configurable Drawer
Dividers (2.125"H x Cut to Lengths Needed)
Cabinet Dimensions:
13.8" W x 12"D x 10.5"H
Drawer Dimensions:
13.5"W x 11.5"D x 3"H

Keyless Programmable Lock
Column Mount, Platinum (PL) Finish

Bar Code Holder

BCH-14-PL
VESA Bar Code Holder
Weight: 1.5 lbs.

Extends from 10"W to 12"W
For Right Hand, Left Hand
and Top Mount uses
VESA Bracket Monitor Mount
Platinum (PL) Finish

BCH-7
Swivel Bar Code Holder
Weight: 1 lbs.

180˚ Degree Swivel
Worksurface Mount
Black Plasticol Finish

storage systems

RB-2-B
Rear Basket
Weight: 1 lbs.

Stores blood pressure cuffs, IV bags,
cordless barcode holder chargers, etc.
16.25"W x 5.24"D x 6"H
Black (B) Finish
Weight Limit Not to exceed 5 lbs.

RB-3-L
Rear Basket
Weight: 1 lbs.

Stores blood pressure cuffs, IV bags,
cordless barcode holder chargers, etc.
16.25"W x 5.24"D x 6"H
Light Grey (L) Finish
Weight Limit Not to exceed 5 lbs.

The rear basket is primarily used for storage. With the Accessory Shelf, the basket can additionally be used to hold your cordless bar code charging base, zebra printer, etc.

SF-1-B
Accessory Shelf for Rear Basket
Weight: 1 lbs.

Shelf to hold bar code charging
bases, zebra printers, etc.
14.5"W x 3.75"D
Black (B) Finish
Only works with RB-2 and RB-3
RB-2 and RB-3 sold separately

ANSI/BIFMA & CARB 93120 Compliant

Shelves

PT-MPS-6-PL
Multi-Purpose Adjustable Shelf
Weight: 6 lbs.

Adjustable Secure Strap Included
18"W x 7"-12"D x 2.6"H
Column Mount
Platinum (PL) Finish

Sani-Wipe Holder

PT-SW1-PL
Sani-Wipe Bracket
Weight: 1 lbs.

Bracket Holds Sani-Wipe Bracket & Canister
(**designed to work with PDI 3-in-1 Universal Sani-bracket, #P010901**)
Bracket Dimensions: 3.5" W x 2.8"H
Column Mount
Platinum (PL) Finish

Mousing

SAM-3 Left
Left-handed Swing a Mouse
Weight: 2 lbs.

8"W x 9"H
Worksurface Mount
Black Finish

MH
Mouse House
Weight: .5 lbs

2.75"W x 4"H x 1.5"D
Adhesive Mount
White Finish

Miscellaneous

U222-004-R
USB 4-Port Hub
Weight: .5 lbs.

Expands 1 USB 2.0 port into 4 ports
Data transfer rates up to 480 Mbps
Backward compatible with USB 1.1
Compact 110/220V AC power adapter
USB AA extension cable
Black FInish

Color Coding

The color code system creates a uniform and professional image for hospitals and healthcare providers. Carts can be easily identified as belonging to a specific department, discipline or clinician.

CCS-XX
Vinyl Strips - Pack of 10 (1 color)
Size: 1 1/8"H x 12"W
Paper-backed for easy installation.
XX = Color.
See below for available colors.

Colors:
CCS-01: MAGENTA
CCS-02: GOLDEN YELLOW
CCS-03: CARDINAL RED
CCS-04: BLUE
CCS-05: FEDEX GREEN
CCS-06: PUMPKIN
CCS-07: ROYAL PURPLE

Altus has made your accessory selection a snap. Find the cart you have selected. Under that, you will see which accessories are compatible with your selection.

There is a limit to how many accessories can be configured with each cart. Please contact customer service to see how we can assist in your configuration.

LEGEND: ✔ COMPATIBLE ⊘ NOT COMPATIBLE ⓘ INCLUDED

ACCESSORIES	LCD CARTS	C9/C9C	C10/C10C	C11/C11C			
BCH-7		⊘	⊘	✔			
BCH-14		✔	✔	✔			
CCS		✔	✔	✔			
MH		✔	✔	✔			
PT-HB		✔	✔	✔			
PT-M2D		✔	✔	✔			
PT-MPS-6		✔	✔	✔			
PT-SW1		✔	✔	✔			
RB-2		⊘	⊘	✔			
RB-3		✔	✔	⊘			
SF-1		✔	✔	✔			
SAM-3-L		⊘	⊘	✔			
U222-004-R		✔	✔	✔			

ALTUS: warranty

1. Select your base cart:

C9-YYYY-Z

C9C-YYYY-Z

C10-YYYY-Z

C10C-YYYY-Z

C11-YYYY-Z

C11C-YYYY-Z

2. Select your caster option:

Choice #1: -1
Perfect Choice for Maximum Mobility.
4"/100mm Shrouded Casters
2 Locking / 2 Non-Locking

OR

Choice #2: -2
Perfect Choice for floor-to floor & traversing elevator thresholds.
4"/100mm Dual Wheel Casters
2 Locking / 2 Non-Locking

2. Select worksurface color (1 standard color). If another worksurface color is preferred, select alternative (8 choices).

Standard Color: Cloud
Alternative Colors: Glacier White, Shark Grey, Amarti Walnut, Crossfire Java, Summerflame, American Natural Maple, Cashmere Fibers, Grey Fibers

Solid

Cloud **(Standard Color)** 0141

Glacier White 0114

Shark Grey 6005

Woodgrain

Amati Walnut 2064

Crossfire Java 2066

Summerflame 2013

American Natural Maple 2028

Abstract

Cashmere Fibers 4007

Grey Fibers 4012

We have tried our best to accurately represent worksurface colors. Colors may vary slightly. Call Customer Service for actual samples.

3. Select additional accessories:

P-CP-BA25

P-CP-CH2

4. Don't see the exact cart you want to specify?

Contact Altus Customer Support at 888.537.1311.

5. Include freight estimate from Altus

6. Email or Fax your purchase order to Altus:

Email: sales@altus-inc.com
Fax: 616.233.9549

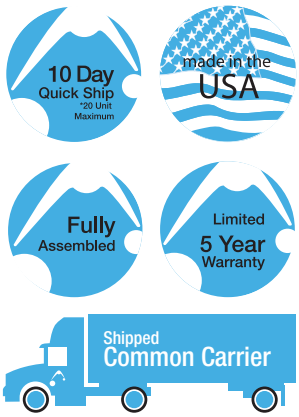

ALTUS: warranty, terms and conditions

ALTUS Five (5) Year Warranty - October 2013

ALTUS Industries, Inc. (ALTUS) warrants all Mobile and Wall-Mounted Technology Workstation products to be free from defects in workmanship and materials under normal use for Five (5) years.

Clio:

- Two (2) year warranty on all power supply components (Controller, Cables, etc.).
- Five (5) year or 1,600 cycle warranty on Lithium Iron Phosphate (LiFe) Battery.

Clio Swap:

- Two (2) year warranty on all power supply components (Controller, Cables, etc.).
- Two (2) year or 1,000 cycle warranty on Lithium-Ion (Mixed Metal) Battery.

Clio Plus:

- Two (2) year warranty on all power supply components (Controller, Cables, etc.).
- Three (3) year or 3,000 cycle warranty - Prorated for years (4) four and (5) five on Lithium Iron Phosphate (LiFeP04) Battery.

ALTUS' warranty obligation is limited to the replacement or repair, at ALTUS' option, of defective products which have been reported by the purchaser to be defective in workmanship or material and which are found to be so by ALTUS upon inspection. Defective products must be returned at the discretion of the factory and all returns must be authorized in advance. ALTUS will assume no responsibility for any labor charges unless agreed to in writing by ALTUS' corporate office. This warranty does not cover product abuse, modification, integration, improper storage, failure to adhere to product instructions, improper operation or misuse. Examples of misuse include, but are not limited to: improper maintenance, improper battery charging / discharging behavior, overstuffing drawers or baskets, use of sharp objects on surfaces, unplugging power cords by pulling on cord, spilling liquids on components, exposure to any harsh elements.

Preventative maintenance is the sole responsibility of the customer. These services include, but are not limited to: lubricating and routine cleaning of the product, minor assembly and adjustment and performing operating checks, inspecting all mechanical and electrical features for proper function and safety, routinely cleaning dust fromt the power system including internal components.

ALTUS will have no warranty obligation if the product is subjected to abuse, alteration, misuse, negligence, or accident or if the customer fails to perform the maintenance service referred to above.

The warranty printed above is the only warranty applicable to this product. All other warranties, expressed or implied, including but not limited to the implied warranties of merchantability and fitness, for a particular purpose are disclaimed.

All terms and conditions are subject to change without prior notice.

Standard Payment Terms and Conditions:
Altus reserves the right to revise all terms and conditions, at any time, without prior notice. In the event of a difference between language contained in a customer order or these terms and conditions, these terms shall control.

Credit:
1% 10, NET 30 upon credit approval. Prior to credit approval, payment in full must be received before shipment. If customer account is past due, Altus, reserves the right to delay any further outstanding shipments until account is in good standing. Credit card payments are not eligible for the 1% discount.

Deposit:
All Purchase Orders received of Net $25,000 or more will require a 50% deposit. All Purchase Orders that include any custom components will require a 50% deposit. This 50% deposit must be received before the Purchase Order is processed.

Shipment Terms:
Shipments are made F.O.B. Walker, MI 49544. Altus products are manufactured or assembled in Walker, Michigan. Please contact Altus Customer Service at 888-537-1311 for a freight quote.

Standard Cartons:
All products shipped and billed in standard cartons only.

Changes to Existing Orders:
Once a customer order is received and processed, order additions/deletions may not be accepted. Please be prepared to place a separate order.

Minimum Order:
No minimum order required; one shipping container per order.

Price and Freight Terms:
Altus reserves the right to revise all prices and freight terms, at any time, without notice.

Special and Custom Orders:
Products manufactured and inventoried by Altus, to your specifications are non-cancelable and will be shipped and invoiced subject to your purchase order and our availability, in complete order quantities. Custom Product carries a limited 12 month warranty.

Lead times:
The shipping date shown on the face of the order acknowledgment represents Altus' best estimate as of the date of the acknowledgment. Altus shall not incur any liability of any kind for failure to ship on the acknowledged ship date unless Altus has expressly agreed to a firm ship date in a separately signed, written instrument by authorized personnel.

Warranty Statement:
Our exclusive 5 Year Warranty means that your Altus product is covered against defects in materials and workmanship. If a problem occurs with your product as a result of normal use, contact Altus at 616-233-9530. This warranty is limited to providing a replacement product or a refund for replaced product, at Altus' sole discretion.

Carrier Shortage or Damage:
Customer bears all responsibility for goods in transit. All carrier shortage or damage issues are resolved directly with the carrier.

Concealed Shortages:
(Items missing from inside any multiple-pack freight piece) Notify our Customer Service Department of any shortages within 72 hours of delivery.

Pricing/Order Entry Errors:
Claims for pricing or order entry errors must be made no later than 20 days from receipt of invoice.

Returned Goods Policy:
Returned goods are generally not accepted. All goods are made to order. Returned goods must be authorized by and negotiated with Altus Customer Service Department.

Post-Audit Claims:
Any claim for post-audit adjustments must be submitted to Customer Service within 2 years from date of invoice.

Samples:
Sample products are subject to pre-approval by Customer Service Department.

Product Design:
We reserve the right to change product design, specifications, construction and performance, at any time, without prior notice. Also, we reserve the right to discontinue products, at any time, without prior notice. All dimensions shown are considered for reference purposes and are approximate.

ANSI/BIFMA Standards:
All Altus product is tested to exceed all ANSI/BIFMA standards for the respective product categories/classifications.

Shipping LiFe (Lithium Iron Phosphate) Batteries:
Per UNDOT Regulations, Altus ships all of the LiFeP04 batteries (within the Clio Powered Mobile Technology Workstations) at 30% charge capacity. It is recommended to charge batteries fully (100%) before deployment.

A complete product offering

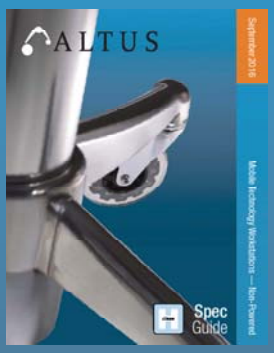

Mobile Technology Workstations
Non-Powered

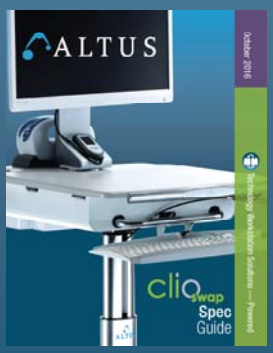

Mobile Technology Workstations
Powered - Clio Swap

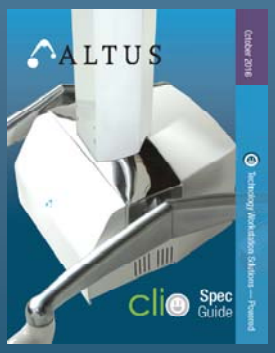

Mobile Technology Workstations
Powered - Clio

Mobile Technology Workstations
Powered - Clio Plus

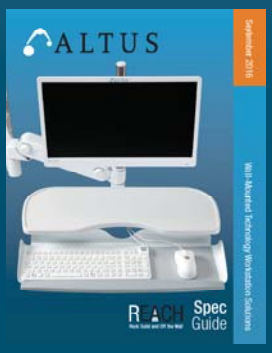

Wall-Mounted
Technology Workstations
Reach

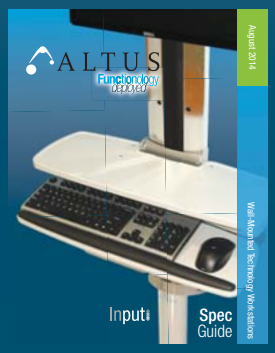

Wall-Mounted
Technology Workstations
Input

ALTUS

PURE MICHIGAN®

HIMSS GOLD Corporate Member

3731 Northridge Drive, NW • Suite 1 • Walker, MI 49544
T: 888.537.1311 • F: 616.233.9549 • www.altus-inc.com